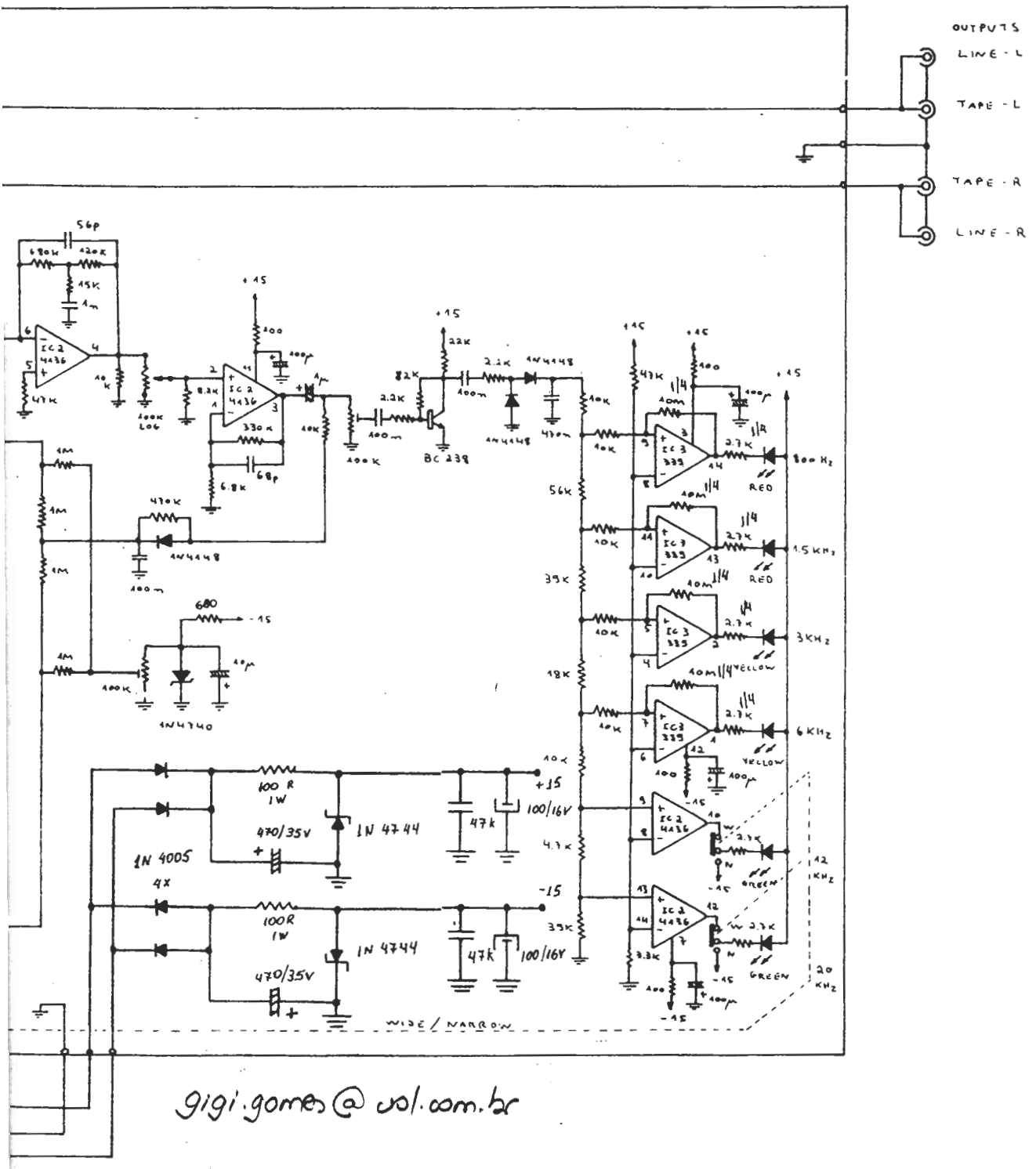

gigi.gomes@uol.com.br

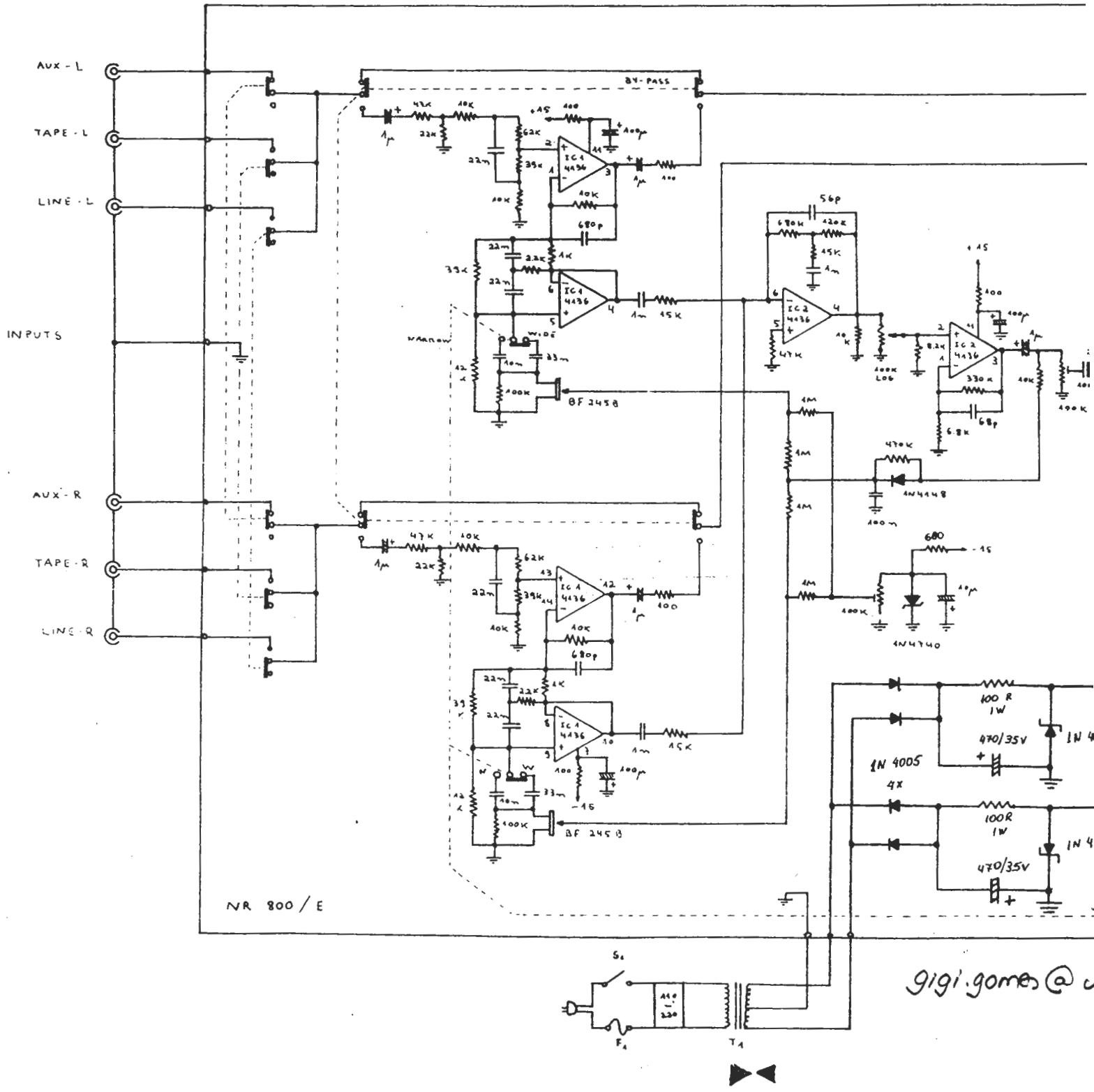
AUX - L
TAPE - L
LINE - L
INPUTS
AUX - R
TAPE - R
LINE - R
BY-PASS
IC 1 4136
IC 2 4136
BF 245 B
NARROW
WIDE
1N 4005
4x
100 R
1W
470/35V
NR 800 / E
gigi.gomes@